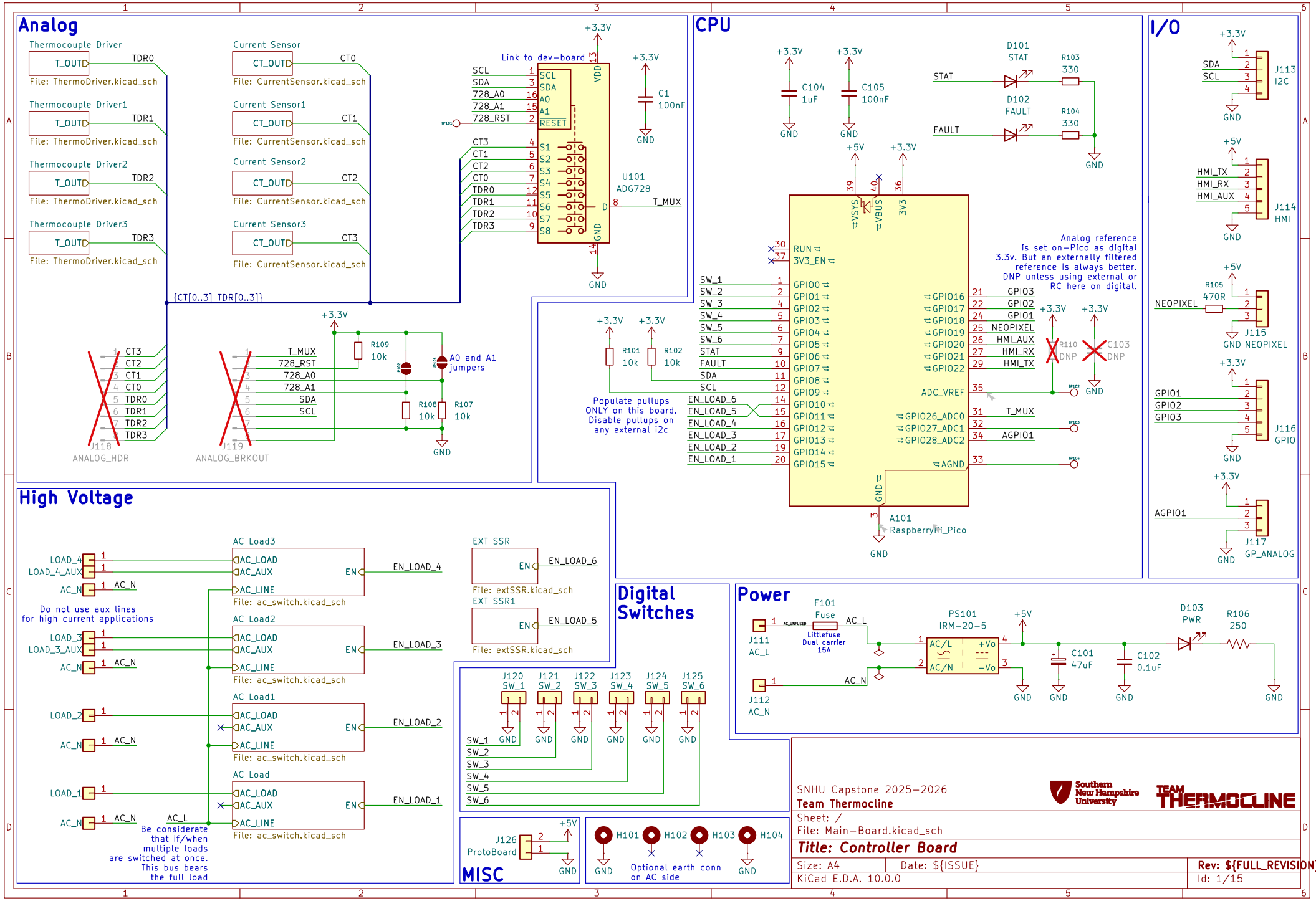
Analog
Thermocouple Driver
T_OUT
TDR0
File: ThermoDriver.kicad_sch
Thermocouple Driver1
TDR1
Thermocouple Driver2
TDR2
Thermocouple Driver3
TDR3
Current Sensor
CT_OUT
CT0
File: CurrentSensor.kicad_sch
Current Sensor1
CT1
Current Sensor2
CT2
Current Sensor3
CT3
Link to dev-board
SCL
SDA
728_A0
728_A1
728_RST
RESET
VDD
GND
U101
ADG728
T_MUX
+3.3V
C1
100nF
{CT[0..3] TDR[0..3]}
J118
ANALOG_HDR
J119
ANALOG_BRKOUT
R109
10k
R108
10k
R107
10k
A0 and A1
jumpers
CPU
C104
1uF
C105
100nF
D101
STAT
D102
FAULT
R103
330
R104
330
+5V
VSYS
VBUS
3V3
RUN
3V3_EN
GPIO0
GPIO1
GPIO2
GPIO3
GPIO4
GPIO5
GPIO6
GPIO7
GPIO8
GPIO9
GPIO10
GPIO11
GPIO12
GPIO13
GPIO14
GPIO15
GPIO16
GPIO17
GPIO18
GPIO19
GPIO20
GPIO21
GPIO22
ADC_VREF
GPIO26_ADC0
GPIO27_ADC1
GPIO28_ADC2
AGND
NEOPIXEL
HMI_AUX
HMI_RX
HMI_TX
AGPIO1
EN_LOAD_6
EN_LOAD_5
EN_LOAD_4
EN_LOAD_3
EN_LOAD_2
EN_LOAD_1
R101
10k
R102
10k
Populate pullups
ONLY on this board.
Disable pullups on
any external i2c
Analog reference
is set on-Pico as digital
3.3v. But an externally filtered
reference is always better.
DNP unless using external or
RC here on digital.
R110
DNP
C103
DNP
A101
RaspberryPi_Pico
I/O
J113
I2C
J114
HMI
R105
470R
J115
GND NEOPIXEL
J116
GPIO
J117
GP_ANALOG
High Voltage
AC Load3
AC Load2
AC Load1
AC Load
AC_LOAD
AC_AUX
AC_LINE
EN
File: ac_switch.kicad_sch
LOAD_4
LOAD_4_AUX
LOAD_3
LOAD_3_AUX
LOAD_2
LOAD_1
AC_N
AC_L
Do not use aux lines
for high current applications
Be considerate
that if/when
multiple loads
are switched at once.
This bus bears
the full load
EXT SSR
EXT SSR1
File: extSSR.kicad_sch
Digital
Switches
J120
SW_1
J121
SW_2
J122
SW_3
J123
SW_4
J124
SW_5
J125
SW_6
GND
Power
F101
Fuse
Littlefuse
Dual carrier
15A
J111
AC_L
J112
AC_N
PS101
IRM-20-5
AC/L
AC/N
+Vo
-Vo
C101
47uF
C102
0.1uF
D103
PWR
R106
250
MISC
J126
ProtoBoard
H101
H102
H103
H104
Optional earth conn
on AC side
SNHU Capstone 2025-2026
Team Thermocline
Southern New Hampshire University
TEAM THERMOCLINE
Sheet: /
File: Main-Board.kicad_sch
Title: Controller Board
Size: A4
Date: ${ISSUE}
Rev: ${FULL_REVISION}
KiCad E.D.A. 10.0.0
Id: 1/15

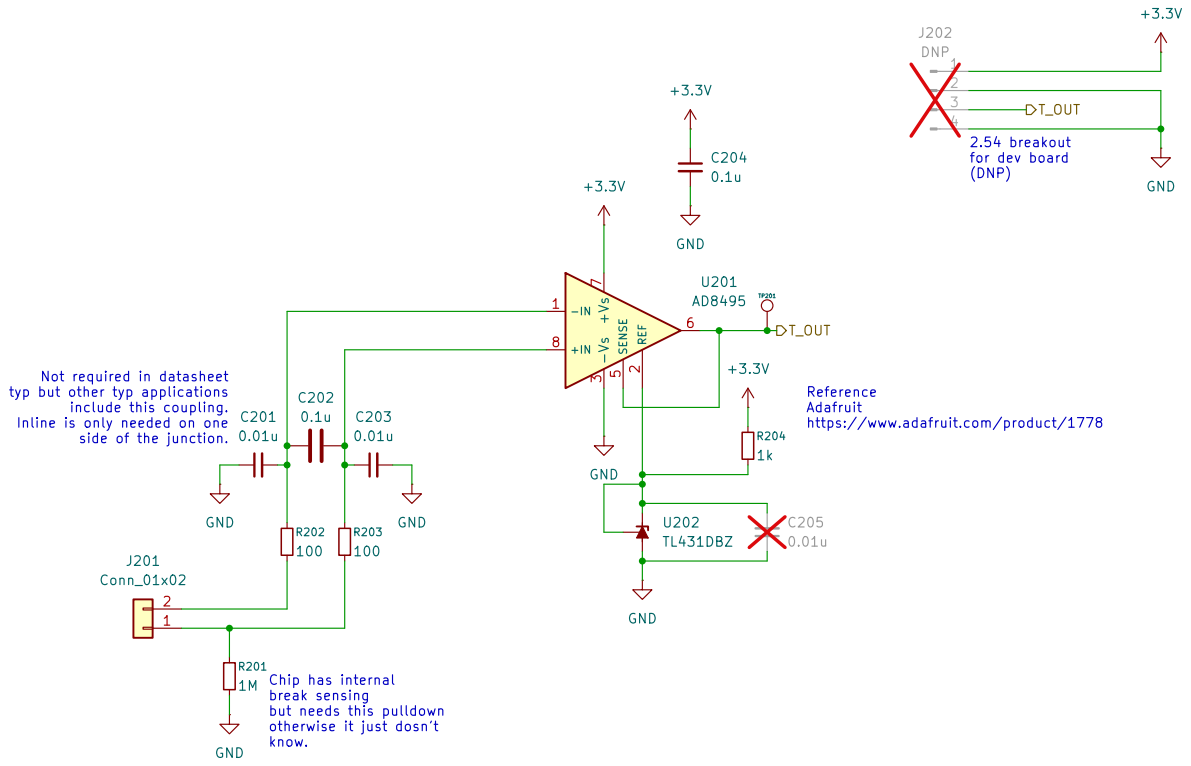

SNHU Capstone 2025–2026

Team Thermocline

Sheet: /Thermocouple Driver/

File: ThermoDriver.kicad_sch

Title: Controller Board

Size: A4	Date: ${ISSUE}	**Rev: ${FULL_REVISION}**
KiCad E.D.A. 10.0.0		Id: 2/15

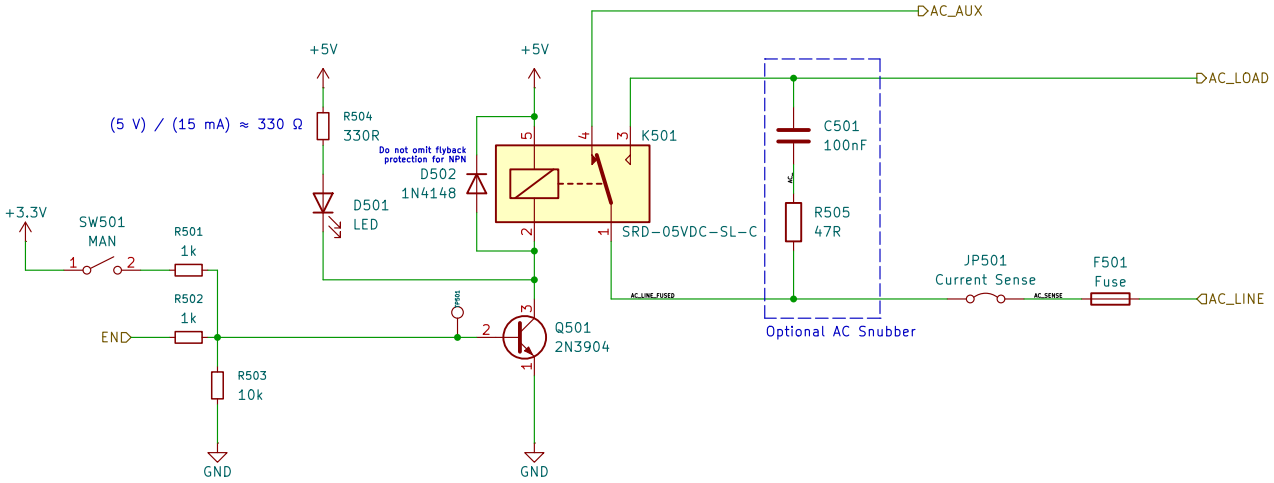

SNHU Capstone 2025-2026

Team Thermocline

Sheet: /AC Load/

File: ac_switch.kicad_sch

Title: Controller Board

Size: A4	Date: ${ISSUE}	**Rev: ${FULL_REVISION}**
KiCad E.D.A. 10.0.0		Id: 5/15

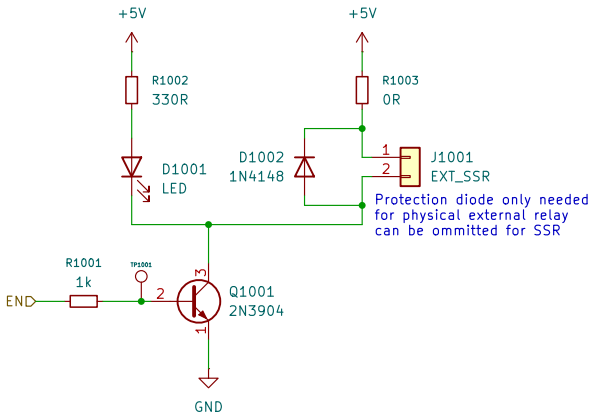

SNHU Capstone 2025–2026

Team Thermocline

Sheet: /EXT SSR/

File: extSSR.kicad_sch

Title: Controller Board

Size: A4	Date: ${ISSUE}	**Rev: ${FULL_REVISION}**
KiCad E.D.A. 10.0.0		Id: 10/15

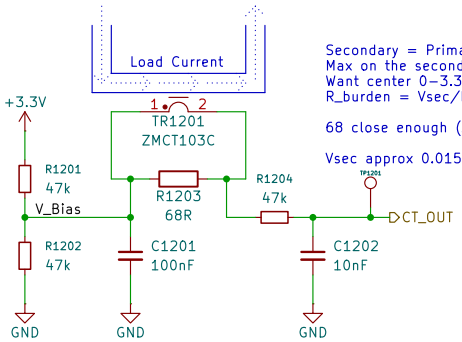

Secondary = Primary Current / 1000
Max on the secondary is 15A/1000 -> 15mA (RMS)
Want center 0-3.3v for processing
R_burden = Vsec/Isec = 1.0/0.015 = 66.7ohm

68 close enough (All values rms too btw)

Vsec approx 0.015 * 68 -> 1.02V peak (1.44V)

SNHU Capstone 2025-2026
Team Thermocline

Sheet: /Current Sensor/
File: CurrentSensor.kicad_sch

Title: Controller Board

Size: A4	Date: ${ISSUE}	**Rev: ${FULL_REVISION}**
KiCad E.D.A. 10.0.0		Id: 12/15